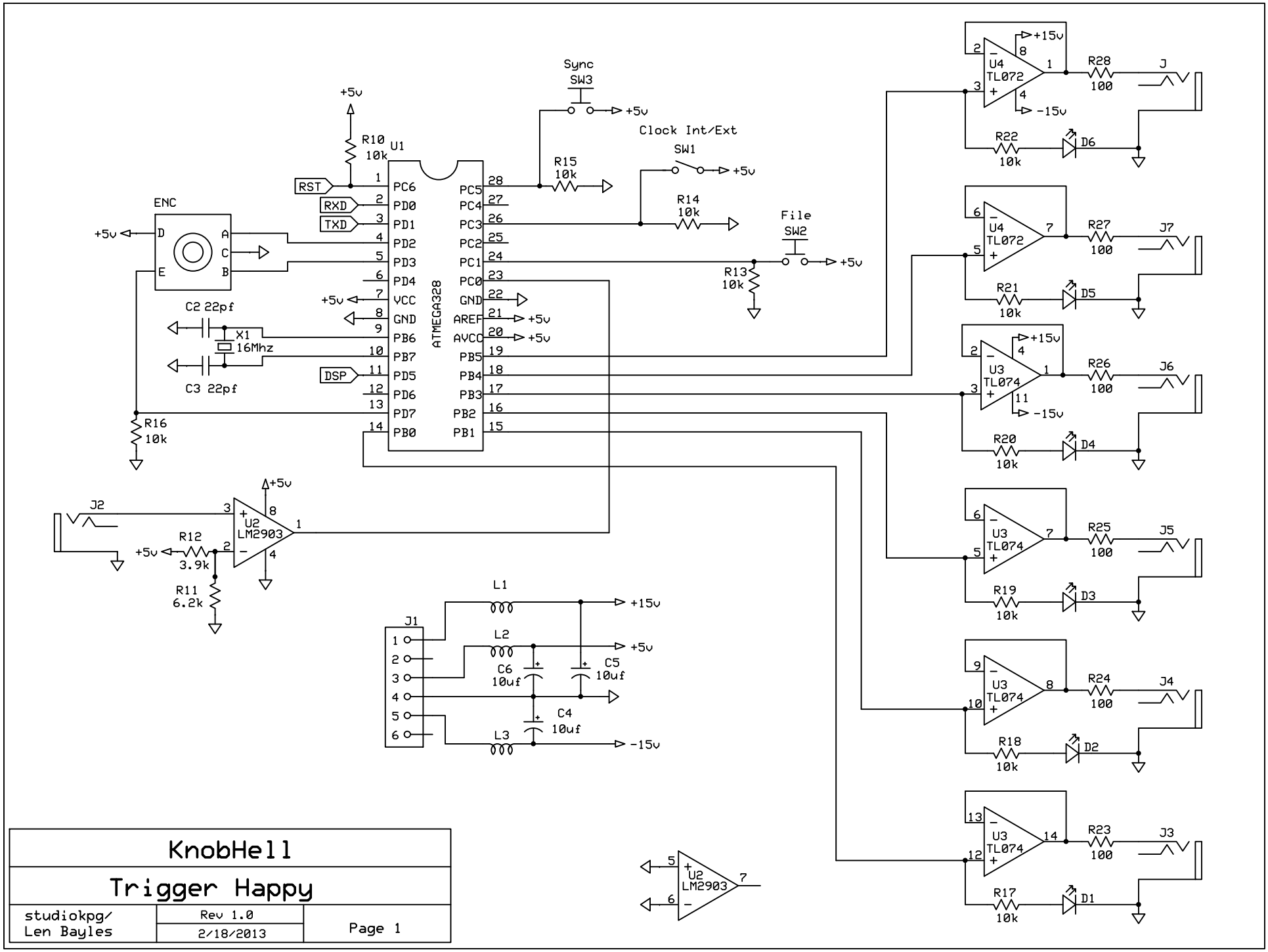
KnobHell
Trigger Happy
studiokpg/
Len Bayles
Rev 1.0
2/18/2013
Page 1
U1
ATMEGA328
PC6
PD0
PD1
PD2
PD3
PD4
VCC
GND
PB6
PB7
PD5
PD6
PD7
PB0
PC5
PC4
PC3
PC2
PC1
PC0
GND
AREF
AVCC
PB5
PB4
PB3
PB2
PB1
RST
RXD
TXD
DSP
R10
10k
R15
10k
R14
10k
R13
10k
R16
10k
Sync
SW3
Clock Int/Ext
SW1
File
SW2
ENC
C2 22pf
C3 22pf
X1
16Mhz
J2
U2
LM2903
R12
3.9k
R11
6.2k
J1
L1
L2
L3
C6
10uf
C5
10uf
C4
10uf
+15v
-15v
+5v
U4
TL072
U3
TL074
R28
R27
R26
R25
R24
R23
R22
R21
R20
R19
R18
R17
100
10k
J
J7
J6
J5
J4
J3
D6
D5
D4
D3
D2
D1